All RIGHT RESERVED
VER: OIL-19-01/1004

intermot® NHM® 英特姆®

afaq ISO 9001 Quality TAF Management System Certification 中意合资 Sino-Italion JV'

Low-Speed High-Torque

EPMZ Series Orbit Hydraulic Motor

Intermot Product Catalog

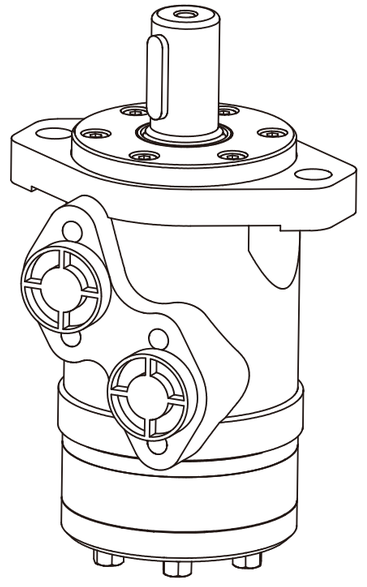

NINGBO OIL CONTROL HYDRAULIC CO., LTD.
NINGBO INTERMOT HYDRAULIC MOTOR CO., LTD.

Add: No. 1258 , East Zhenluo Road, Zhenhai, Ningbo, P.R.China
P.C. : 315207
Tel: +86 574 8626 2917 (HEAD OFFICE)
+86 769 2217 8605 (GUANGDONG OFFICE)
Fax: +86 574 8626 0912 (HEAD OFFICE)
+86 769 2270 9005 (GUANGDONG OFFICE)
Web: http://www.chinaintermot.com.cn www.nhm.com.cn
E-mail: sales@chinaintermot.com.cn

http://www.chinaintermot.com.cn
NINGBO OIL CONTROL HYDRAULIC CO., LTD.
NINGBO INTERMOT HYDRAULIC MOTOR CO., LTD.

ABOUT US

NINGBO OIL CONTROL HYDRAULIC CO., LTD. is a Sino-Italian Joint venture specializing in designing and manufacturing of hydraulic motor, gearbox, hydraulic winch and other hydraulic products. Evolving from its predecessor NINGBO INTERMOT HYDRAULIC MOTOR CO., LTD., established by INTERMOT S.r.l. (Italy), R&D S.r.l. (Italy) and the holding family members of SAI S.p.a. (Italy), Ningbo Oil Control has more than 20 years of experience and in-depth know-how in the hydraulic industry. Our products have covered a great variety of applications throughout the world with INTERMOT brand renowned for its outstanding price for value to the customers. Relying on the latest technology from Italy, the company integrates the corporate functions of R&D, designing & proto-typing, production, testing and marketing.

Up to now, we possess modernized workshop of over 20,000 square meters and an array of high-quality automatic machinery and equipments from Europe, Japan and Taiwan with the ultimate pursuit of quality, stability and precision. Our staff is qualified with strict professional training, competitive skills and personality. With management information systems such as ERP and CRM, we are certified with IS09001:2000 and CCS marine certification. Scientific and efficient management has also contributed to the excellent quality of INTERMOT products and responsive and professional after-sales service has won great reputation in the industry.

Our main product range includes: NHM series, CM series, FMB (fixed disp.) / FMC(dual-disp.) series of low-speed high-torque hydraulic motor, OILW travel gearbox, OILP planetary gearbox, OILH hydraulic winch, EPMZ orbit hydraulic motor. Meanwhile, we are also the distributor of the hydraulic products such as 'M+S' orbit motor of Bulgaria and orbit motor of Eaton Jining. Our hydraulic motors are widely applied in construction engineering, hoisting and transportation, metallurgic and heavy duty machinery, oil extraction, coal mining, marine applications, machine tools, plastic molding machines, geological prospecting and other hydraulic transmission systems. Our products are particularly suitable for driving injection mounding machine, lifting screw drives, driving winch and various rolling drums, as well as other transmission mechanics like track and wheel machines. Confronting with the challenge of the new century, we always honor our quality slogan, being 'Take responsibility for our products and services, while fulfilling the actual demands of our customers'. In pursuit of quality, we are keen to provide our customers with reliable products and services, striving to be the leader in the hydraulic motor sector in China.

CONTENT

PRODUCT FEATURE	01
USER GUIDE	03
EPMZM SERIES ORBIT HYDRAULIC MOTOR	04
EPMZ SERIES ORBIT HYDRAULIC MOTOR	08
EPMZR SERIES ORBIT HYDRAULIC MOTOR	09
EPMZH SERIES ORBIT HYDRAULIC MOTOR	12
EPMZ1 SERIES ORBIT HYDRAULIC MOTOR	15
EPMZ2 SERIES ORBIT HYDRAULIC MOTOR	16
EPMZ3 SERIES ORBIT HYDRAULIC MOTOR	16
EPMZS SERIES ORBIT HYDRAULIC MOTOR	19
EPMZSY SERIES ORBIT HYDRAULIC MOTOR	20
EPMZT SERIES ORBIT HYDRAULIC MOTOR	23
EPMZV SERIES ORBIT HYDRAULIC MOTOR	26

PRODUCT FEATURE

The INTERMOT EPMZ Category is a type of Low Speed High Torque (LSHT) Hydraulic Motor developed based on the orbit principle and planetary cycloid transmission mechanism, where an internal gear is engaged with a fixed planetary gear. The EPMZ design is known for its high power efficiency, low-speed reliability and economic performance. EPMZ array of products feature both axial distribution and disc distribution, to fulfill the customers' needs in various applications in plastic injection mould adjusting, grinders, sprayers, augers and other construction machinery, agricultural equipments, hoisting equipments etc.,

Within the EPMZ category, there are EPMZM, EPMZ, EPMZR, EPMZ1, EPMZH, EPMZ2, EPMZ3, EPMZS, EPMZY, EPMZT & EPMZV series of motors, with diversified structure and technical features to fulfill the specific application requirements of the customers.

Structure and Functional Diagram of EPMZ series of Orbit motor

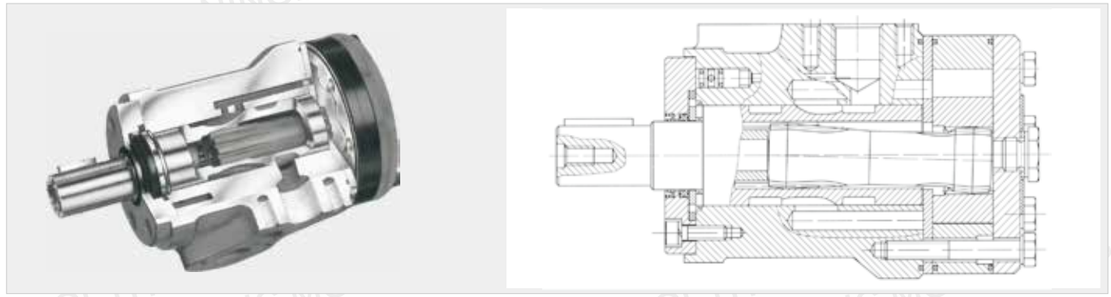

(1)EPMZM、EPMZ、EPMZR、EPMZ1、EPMZH、EPMZ2 & EPMZ3 series with axial oil distribution structure.

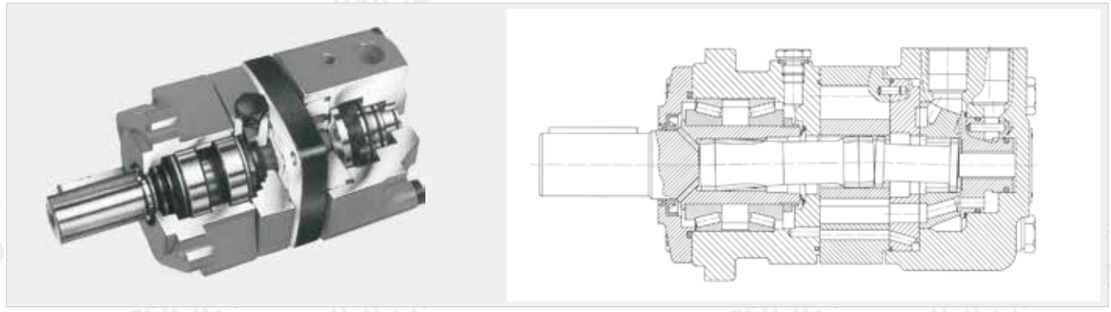

(2)EPMZS、EPMZY、EPMZT & EPMZV series with Disc oil distribution structure.

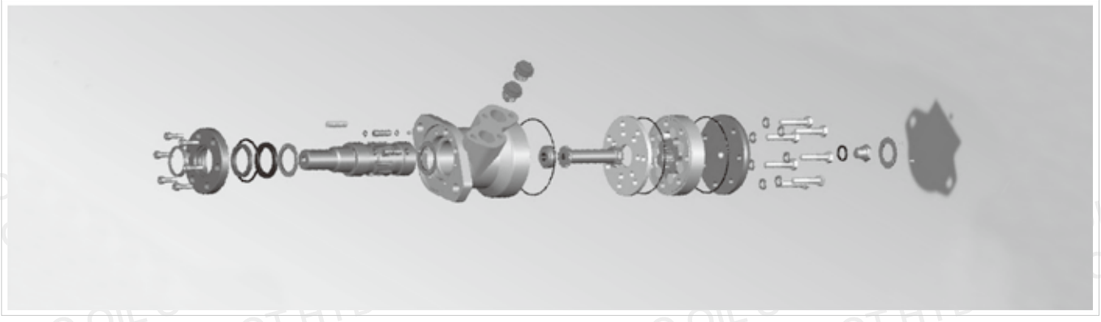

(3)Exploded-View Drawing of EPMZ series

USER GUIDE

To ensure optimal operation of the motor, please strictly follow the guidance below:

1.Oil temperature: normal condition 20℃~60℃, maximum temperature: 90℃ (for no more than 1 hour).

2.Filtering and oil cleanliness: a filter should be installed in the oil circuit (backflow) with the filtration precision level of 10~30μm. A magnetic equipment should be installed at the bottom of the oil tank to prevent any grits, waste or solid particles from entering the oil circuit. The maximum oil contamination level by solid particles is no more than 19/16.

3.Hydraulic Oil Viscosity: 42~74 mm2/s at 40℃ of oil temperature. Appropriate type of hydraulic oil should be applied according to the actual working conditions of the system.

4.The motors can operate in parallel or in series connection. When the back pressure exceeds 10MPa (or rotation speed exceeds 200rpm), an external drain pipe must be connected between the oil drain port and the tank for pressure relief.

5.For EPMZ and EPMZR series motors, customers may choose the type of output shaft according to their application requirements as follows:

5.1 The output shaft with radial bearings that is able work with a certain level of radial force.

5.2 The output shaft without radial bearings which is unable to work with radial force.

In case that radial force exists, radial work load on the output shaft, must be discharged.

6.For EPMZ1, EPMZ2, and EPMZ3 series, the output shaft is radial force tolerant, but is unable to bear considerable level of axial work load.

7.For EPMZS, EPMZY, EPMZT and EPMZV Types, the output shaft is able to work with considerable amount of work load from both axial and radial directions.

8.The optimal work conditions should be maintained at 1/3~2/3 of the rated work conditions.

9.To obtain a longer service life of the motor, a run-in period of no less than one hour should be in place under 30% of the rated pressure before putting the motor under actual workload.

10.The motor must be filled up with sufficient oil in the casing for the lubrication of the dynamic components before running with load.

TABLE OF EPMZ PRODUCT DISPLACEMENTS

Distribution Type	Serial Code	Displacement (cm³ / rev)	Max. Pressure (Mpa)	Speed Range (rpm)	Max. Output Power (Kw)
Axial Distribution	EPMZM	8-50	14	40-1950	3.2
	EPMZ	36-400	16.5	30-1500	10
	EPMZR	36-375	20	30-1250	15
	EPMZH	200-500	20	30-430	17
	EPMZ1	50-400	16.5	30-879	10
	EPMZ2	125-400	20	30-650	16
	EPMZ3	500-630	20	20-220	17
Disc Distribution	EPMZS	80~375	22.5	30-800	24
	EPMZSY	80~475	22.5	8-800	36
	EPMZT	160~800	24	30-705	43
	EPMZV	315~1000	28	10-446	56

The above data are measured and obtained under specific experimental conditions, and only for product description purposes. The data should not be interpreted as warranted characteristics in legal term. Ningbo Intermot (Ningbo Oil Control Hydraulic Co., Ltd.)reserves the rights to implement modifications without notice. All Partial or total reproduction and copy of such data without formal authorization is strictly forbidden.

EPMZM SERIES ORBIT HYDRAULIC MOTOR

EPMZM SERIES Motor is a low volumn, economical and compact design of Orbit Motor. . The design adapts the Gerotor gear set structure that features compact size, high power density and light weight.

Charateristics Features:

- Advanced processing and treatments of the Gerotor gear sets, which provides compact size, high efficiency and long service life of the motor.
- Shaft seal of high pressure tolerance applied to enable the use in parallel or in series.
- Advanced structure design, with improved power density charateristics

TECHNICAL SPECIFICATION

Type		EPMZM8	EPMZM12.5	EPMZM20	EPMZM32	EPMZM40	EPMZM50
Displacement (cm³ / rev)		8.2	12.9	19.9	31.6	39.8	50.3
Speed (rpm)	Rated	1537	1256	814	513	452	358
	Continuous	1950	1550	1000	630	500	400
	Intermittent	2450	1940	1250	800	630	500
Torque (N.m)	Rated	8	13	19	31	37	33
	Continuous	11	16	25	40	45	46
	Intermittent	15	23	35	57	70	88
	Peak	21	33	51	64	82	100
Output Power (kW)	Rated	1.3	1.7	1.7	1.7	1.7	1.2
	Continuous	1.8	2.4	2.4	2.4	2.2	1.8
	Intermittent	2.6	3.2	3.2	3.2	3.2	3.2
Pressure Drop (Mpa)	Rated	9	9	9	9	8.5	6
	Continuous	10	10	10	10	9	7
	Intermittent	14	14	14	14	14	14
	Peak	20	20	20	16	16	16
Flow (L/min)	Rated	14	18	18	18	20	20
	Continuous	16	20	20	20	20	20
	Intermittent	20	25	25	25	25	25
Weight (kg)		1.9	2	2.1	2.2	2.3	2.4

Type		Max. inlet pressure (Mpa)
EPMZM8~50	Rated	14
	Continuous	17.5
	Intermittent	22.5

◎ Rated Speed / Rated Torque: Speed / Torque value of the operating motor under rated flow and pressure
◎ Continuous value: Max. value of the operating motor in continuous working condition..
◎ Intermittent value: Max. value of the motor when working 6 seconds per minute.
◎ Peak value: Max. value of the motor when working for 0.6 second per minute.

The above data are measured and obtained under specific experimental conditions, and only for product description purposes. The data should not be interpreted as warranted characteristics in legal term. Ningbo Intermot (Ningbo Oil Control Hydraulic Co., Ltd.)reserves the rights to implement modifications without notice. All Partial or total reproduction and copy of such data without formal authorization is strictly forbidden.

EPMZMh END PORTS MOUNTING DATA

Flange M

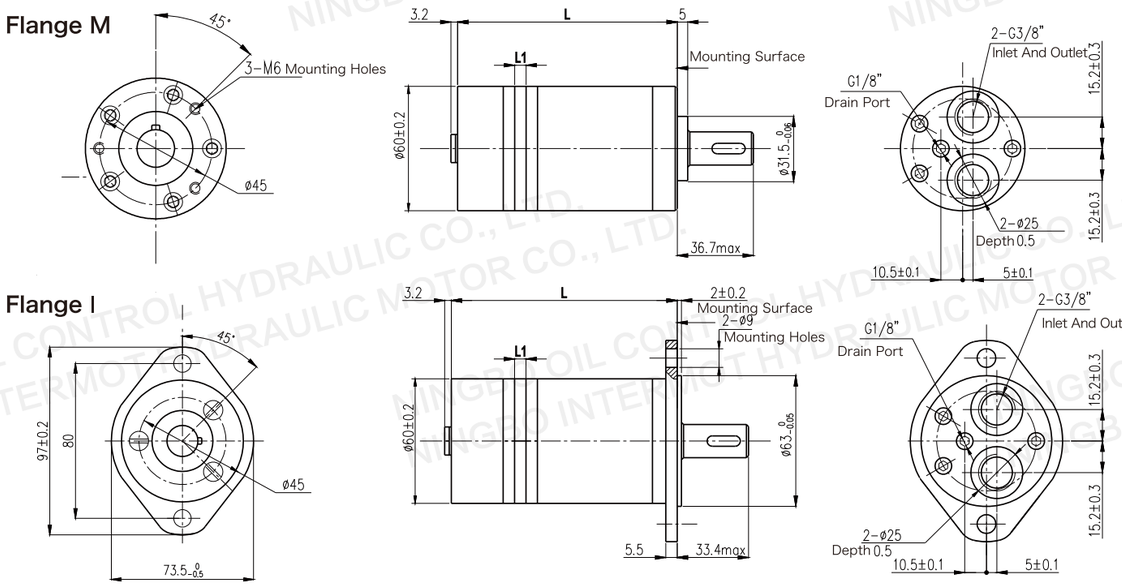

Flange I

EPMZMc SIDE PORTS MOUNTING DATA

Flange M

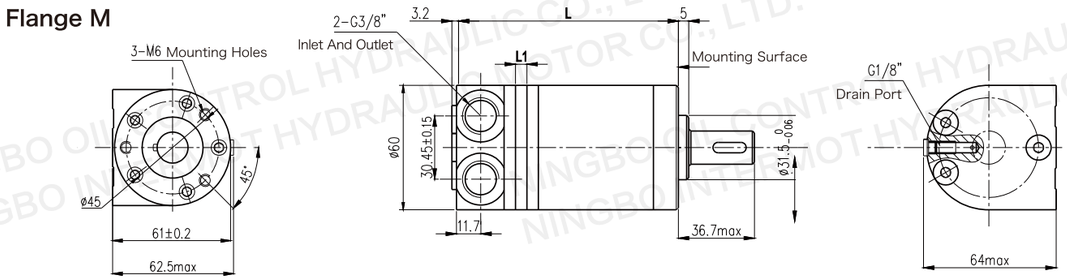

Flange I

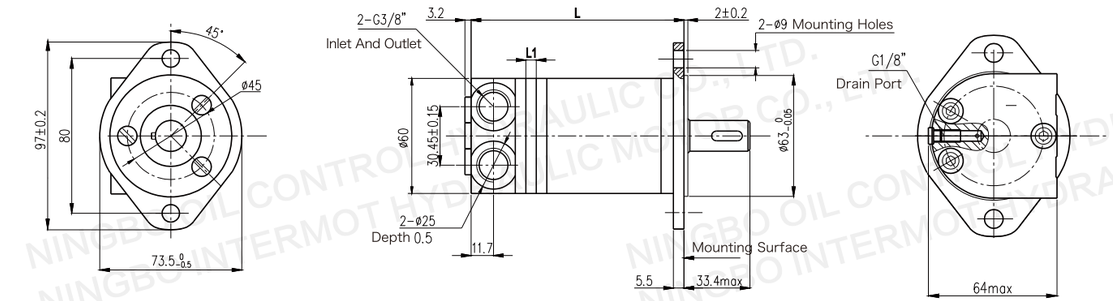

EPMZMh END PORTS MOUNTING DATA

	M Flange M		I Flange I	
Type	L	L1	L	L1
EPMZM 8	104	3.5	107.5	3.5
EPMZM 12.5	106	5.5	109.5	5.5
EPMZM 20	109	8.5	112.5	8.5
EPMZM 32	114	13.5	117.5	13.5
EPMZM 40	117.5	17	121	17
EPMZM 50	122	21.5	125.5	21.5

EPMZMc SIDE PORTS MOUNTING DATA

	M Flange M		I Flange I	
Type	L	L1	L	L1
EPMZM 8	105	3.5	108.5	3.5
EPMZM 12.5	107	5.5	110.5	5.5
EPMZM 20	110	8.5	113.5	8.5
EPMZM 32	115	13.5	118.5	13.5
EPMZM 40	118.5	17	122	17
EPMZM 50	123	21.5	126.5	21.5

SHAFT EXTENSION DIMENSIONS FOR EPMZM

Standard Parallel Key Shaft: B1
Cylindrical Shaft: Φ16
Parallel Key: 5X5X16

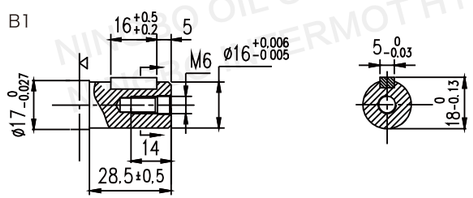

PERMISSABLE PRESSURE LIMIT OF OUTPUT SHAFT SEAL

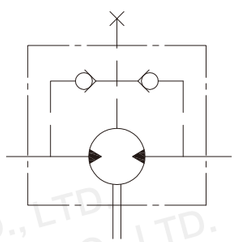

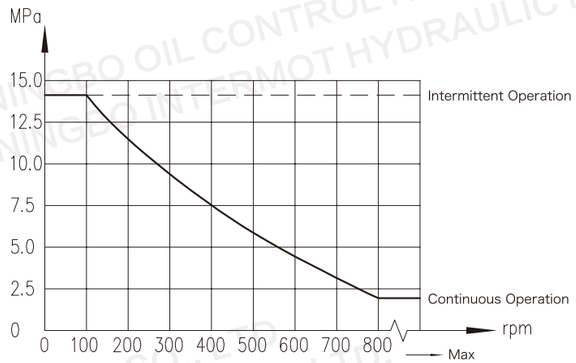

In applications without drain-line, pressure on output shaft seal is slightly higher than in the back-flow drain.
In applictions with drain-line, pressure on output shaft seal is the same with the pressure in the drain-line.

DIRECTION OF SHAFT ROTATION:STANDARD

When facing shaft end of motor,shaft to rotate:Clockwise when port “A” is pressurized.Counter- clockwise when port “B” is pressurized.

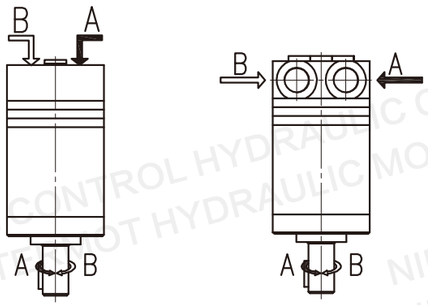

EPMZMh End Port

EPMZMc Side Port

STATUS OF THE SHAFT’ S RADIAL FORCE

$$Fr = \frac{130400}{61.5+L}\ N$$

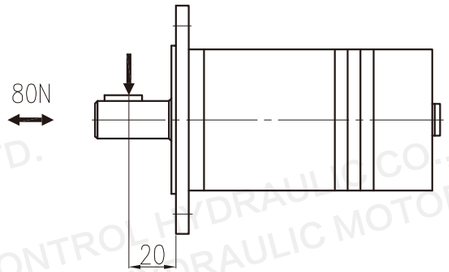

Fr=Radial Force（N）

L=Distance（mm）

n=Speed（rpm）

Max.Force Load

Rhomb-flange L=15mm

Circle-flange L=20mm

ORDER CODES

	1		2		3		4		5		6
EPMZM		—		—		—		—		—	

Pos.1		2	3		4		5		6	
Structure Code		Displacement	Flange & Mounting		Output Shaft		Oil Ports & Drain Port		Rotation Direction	
h	End Port	8 12.5 20 32 40 50	M	3-M6Circle-flange, MountingΦ31.5X5 2-Φ9Romb-flange, MountingΦ63X2	B1	Parallel Key5X5X16 ShaftΦ25	TA9O9	G3/8,G1/8	Omit	Standard
c	Side Port		I						F	Opposite

EPMZ SERIES ORBIT HYDRAULIC MOTOR

EPMZ SERIES Motor is a low volumn, economical and compact design of Orbit Motor with axial oil distribution.

The design adapts the Gerolor gear set structure that features compact size, high power density and light weight.

Charateristics Features:

- Advanced processing and treatments of the Gerotor gear sets, which provides compact size, high efficiency and long service life of the motor.
- Shaft seal of high pressure tolerance applied to enable the use in parallel or in series.
- Advanced structure design, with improved power density charateristics

TECHNICAL SPECIFICATION

Type		EPMZ 36	EPMZ 50	EPMZ 80	EPMZ 100	EPMZ 125	EPMZ 160	EPMZ 200	EPMZ 250	EPMZ 315	EPMZ 400	EPMZ 500	EPMZ 250	EPMZ 315	EPMZ 400	EPMZ 500
Displacement(ml/r)		36	51.7	77.7	96.2	120.2	157.2	194.5	240.3	314.5	389.5	486.5	240.3	314.5	389.5	486.5
Speed(rpm)	Rated	1050	850	650	520	390	310	260	200	156	130	110	200	156	130	110
	Continuous	1500	1150	770	615	490	383	310	250	192	155	120	250	192	155	120
	Intermittent	1650	1450	960	770	615	475	385	310	240	190	150	310	240	190	150
Torque(N.m)	Rated	55	81	129	161	202	204	259	325	375	360	385	325	375	360	430
	Continuous	55	100	146	182	236	302	360	380	375	360	385	460	475	490	430
	Intermittent	76	128	186	227	290	370	440	460	555	525	560	570	555	580	560
	Peak	96	148	218	264	360	434	540	550	650	680	680	670	840	840	780
Output Power(kW)	Continuous	8	10	10	11	10	10	10	8.5	7	6	5	8.5	7	6	6
	Intermittent	11.5	12	12	13	12	12	12	10.5	8.5	7	6	10.5	8.5	7	7
Pressure Drop(MPa)	Rated	12.5	12.5	12.5	12.5	12.5	10	10	10	9	7	6	10	9	7	7
	Continuous	12.5	14	14	14	14	14	14	11	9	7	6	14	12	9.5	7
	Intermittent	16.5	17.5	17.5	17.5	17.5	17.5	17.5	14	14	10.5	9	17.5	14	11.5	9
	Peak	22.5	22.5	22.5	22.5	22.5	22.5	22.5	18	16	14	12	22.5	22.5	18	13
Flow(L/min)	Rated	40	45	55	55	55	55	55	55	55	55	55	55	55	55	55
	Continuous	55	60	60	60	60	60	60	60	60	60	60	60	60	60	60
	Intermittent	60	75	75	75	75	75	75	75	75	75	75	75	75	75	75
Weight(kg)		5.6	5.6	5.7	5.9	6	6.2	6.4	6.7	6.9	7.4	8	6.7	6.9	7.4	8
Diameter Of Coupling Shaft(mm)		Φ25 Φ25.4 Φ31.75 Φ32							Φ25 Φ25.4				Φ31.75 Φ32			

Please refer to the above datasheet based on the size of coupling shaft

◎ Rated Speed / Rated Torque: Speed / Torque value of the operating motor under rated flow and pressure

◎ Continuous value: Max. value of the operating motor in continuous working condition..

◎ Intermittent value: Max. value of the motor when working 6 seconds per minute.

◎ Peak value: Max. value of the motor when working for 0.6 second per minute.

The above data are measured and obtained under specific experimental conditions, and only for product description purposes. The data should not be interpreted as warranted characteristics in legal term. Ningbo Intermot (Ningbo Oil Control Hydraulic Co., Ltd.)reserves the rights to implement modifications without notice. All Partial or total reproduction and copy of such data without formal authorization is strictly forbidden.

See PAGE 10 For Mounting Data

EPMZR SERIES ORBIT HYDRAULIC MOTOR

EPMZR SERIES Motor is design of Orbit Motor with axial oil distribution.
The design adapts the advanced Gerolor gear set structure that realizes automatic compensation in operating under high pressure and features reliable and smooth operation, high efficiency and long service life.

Characteristics features:

- Application of advanced gerolor gear set design that features start-up under low pressure, smooth running and high efficiency.
- Shaft seal of high pressure tolerance applied to enable the use in parallel or in series.
- Special design in the coupling shaft system to realize the long service life.
- Special design and setting of the oil distribution system to reduce the noise level.
- Compact-size with easy installation.

TECHNICAL SPECIFICATION

Type		EPMZR 36	EPMZR 50	EPMZR 80	EPMZR 100	EPMZR 125	EPMZR 160	EPMZR 200	EPMZR 250	EPMZR 315	EPMZR 375	EPMZR 160	EPMZR 200	EPMZR 250	EPMZR 315	EPMZR 375
Displacement(ml/r)		36	51.7	81.5	102	127.2	157.2	194.5	253.5	317.5	381.4	157.2	194.5	253.5	317.5	381.4
Speed(rpm)	Rated	1055	750	650	520	420	330	265	200	165	135	330	265	200	165	135
	Continuous	1250	960	750	600	475	378	310	240	190	155	378	310	240	190	155
	Intermittent	1520	1150	940	750	600	475	385	300	240	190	475	385	300	240	190
Torque(N.m)	Rated	69	100	160	200	250	320	330	352	360	420	320	330	352	360	420
	Continuous	72	100	195	240	300	360	360	390	390	365	380	450	540	550	580
	Intermittent	83	126	220	280	340	430	440	490	535	495	430	500	610	690	690
	Peak	105	165	270	320	370	460	560	640	650	680	460	560	710	840	830
Output Power(kW)	Continuous	8.5	9.5	12.5	13	12.5	12.5	10	7	6	5	12.5	11	10	9	7.5
	Intermittent	9.8	11.2	15	15	14.5	14	13	9.5	9	8	14	13	12	10	9
Pressure Drop(MPa)	Rated	14	14	14	14	14	14	12	11	8.5	8.5	14	12	11	8.5	8.5
	Continuous	14	14	17.5	17.5	17.5	16.5	13	11	9	7	17.5	17.5	17.5	13.5	11.5
	Intermittent	16.5	17.5	20	20	20	20	17.5	15	13	10	20	20	20	17.5	15
	Peak	22.5	22.5	22.5	22.5	22.5	22.5	22.5	20	17.5	15	22.5	22.5	22.5	21	17.5
Flow(L/min)	Rated	40	40	55	55	55	55	55	55	55	55	55	55	55	55	55
	Continuous	45	50	60	60	60	60	60	60	60	60	60	60	60	60	60
	Intermittent	55	60	75	75	75	75	75	75	75	75	75	75	75	75	75
Weight(kg)		6.5	6.7	6.9	7	7.3	7.6	8	8.5	9	9.5	7.6	8	8.5	9	9.5
Diameter Of Coupling Shaft(mm)		Φ25 Φ25.4 Φ31.75 Φ32					Φ25 Φ25.4					Φ31.75 Φ32				

Please refer to the above datasheet based on the size of coupling shaft

◎ Rated Speed / Rated Torque: Speed / Torque value of the operating motor under rated flow and pressure
◎ Continuous value: Max. value of the operating motor in continuous working condition..
◎ Intermittent value: Max. value of the motor when working 6 seconds per minute.
◎ Peak value: Max. value of the motor when working for 0.6 second per minute.

The above data are measured and obtained under specific experimental conditions, and only for product description purposes. The data should not be interpreted as warranted characteristics in legal term. Ningbo Intermot (Ningbo Oil Control Hydraulic Co., Ltd.)reserves the rights to implement modifications without notice. All Partial or total reproduction and copy of such data without formal authorization is strictly forbidden.

EPMZ&EPMZR MOUNTING DATA

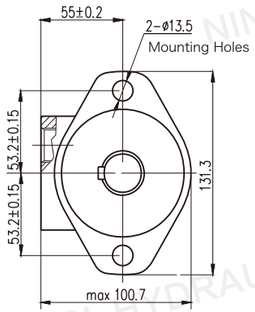

Ⅰ:Two Holes Rhomb-flange

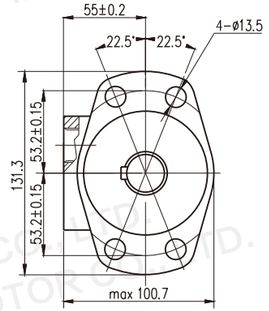

Ⅱ 4:Four Holes Rhomb-flange

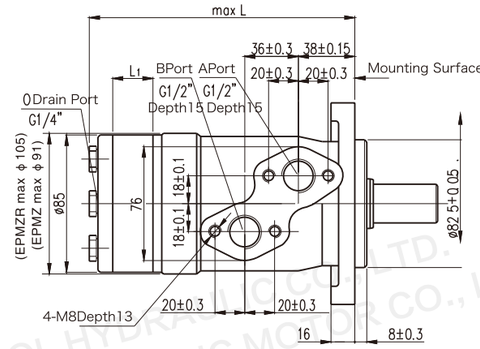

Type	L	L1
EPMZ36	137	7
EPMZ50	137	7
EPMZ80	140.5	10.5
EPMZ100	143	13
EPMZ125	146	16
EPMZ160	151	21
EPMZ200	157	26
EPMZ250	162	32
EPMZ315	172	42
EPMZ400	182	52
EPMZ500	195	65

Type	L	L1
EPMZR36	137	7
EPMZR50	140	10
EPMZR80	146	16
EPMZR100	150	20
EPMZR125	155	25
EPMZR160	161.5	30.5
EPMZR200	170	38.1
EPMZR250	180	50
EPMZR315	192	62
EPMZR375	204	74

SHAFT EXTENSION DIMENSIONS FOR EPMZ&EPMZR

Standard Parallel Key Shaft: B1
Cylindrical Shaft: Φ25
Parallel Key: 8X7X32

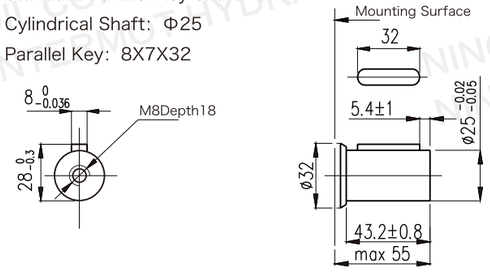

Parallel Key Shaft: B2
Cylindrical Shaft: Φ25.4
Parallel Key: 6.35X6.35X31.75

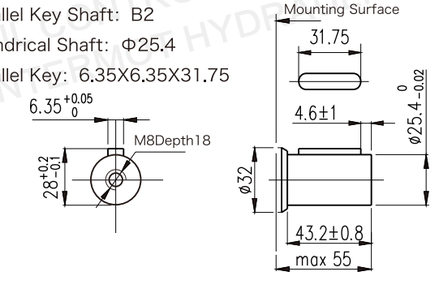

Parallel Key Shaft: B4
Cylindrical Shaft: Φ32
Parallel Key: 10X8X45

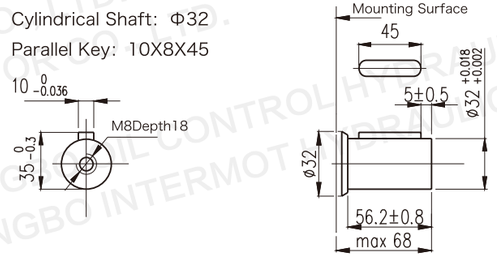

Standard Splined Key Shaft: J
Splined Key: 1英寸 SAE6B

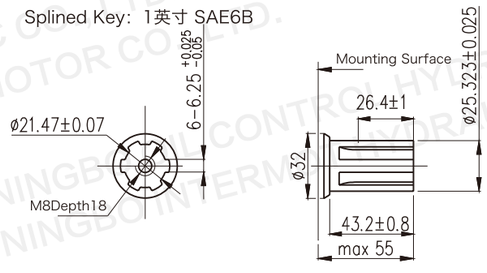

PERMISSABLE PRESSURE LIMIT OF OUTPUT SHAFT SEAL

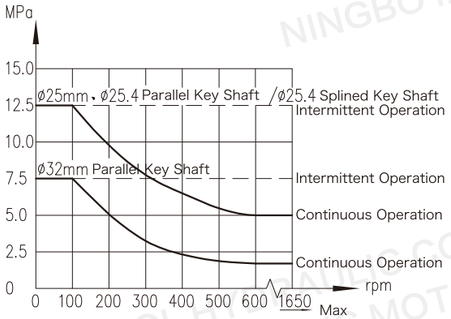

In applications without drain-line, pressure on output shaft seal is slightly higher than in the back-flow drain.In applictions with drain-line, pressure on output shaft seal is the same with the pressure in the drain-line.

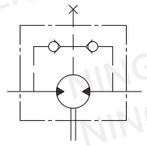

DIRECTION OF SHAFT ROTATION:STANDARD

When facing shaft end of motor,shaft to rotate:Clockwise when port "A" is pressurized.Counter- clockwise when port "B" is pressurized.

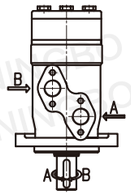

STATUS OF THE SHAFT' S RADIAL FORCE

$$Fr = \frac{800}{n} \cdot \frac{250000}{95+L} N$$

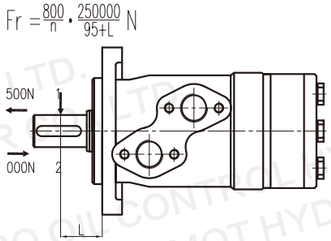

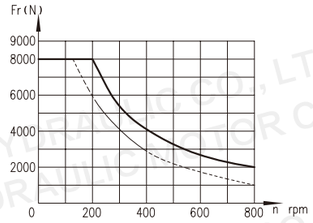

Fr=Radial Force (N)
L=Distance (mm)
n=Speed (rpm)
Max.Force Load
Rhomb-flange L=30mm
Square-flange L=24mm

——— Diameter Of Coupling Shaft&25和&25.4

--------- Diameter Of Coupling Shaft&32

ORDER CODES

	1		2		3		4		5		6
EPMZ		—		—		—		—		—	

Pos.1	2	3		4		5		6	
Structure Code	Displacement	Flange & Mounting		Output Shaft		Oil Ports & Drain Port		Rotation Direction	
Omit	36 50 80 100 125 160 200 250 315 400 500	I	2-Φ13.5Rhomb-flange, MountingΦ82.5X8	Bl	Φ25Shaft, Parallel Key8X7X32	TA101	G1/2Manifold4XM8, G1/4	Omit	Standard
		Ⅱ4	4-Φ13.5Rhomb-flange, MountingΦ82.5X8	B2	Φ25.4Shaft, Parallel Key6.35X6.35X31.75	TA202	M22X1.5Manifold4XM8, M14X1.5	F	Opposite
				B4	Φ32Shaft, Parallel Key10X8X45	TA805	7/8-140-ringManifold 4X5/16-18UNC, 7/16-20UNF		
				J	Φ25.4Shaft, Splined KeySAE 6B				
R	36 50 80 100 125 160 200 250 315 375	I	2-Φ13.5Rhomb-flange, MountingΦ82.5X8	Bl	Φ25Shaft, Parallel Key8X7X32	TA101	G1/2Manifold4XM8, G1/4	Omit	Standard
		Ⅱ4	4-Φ13.5Rhomb-flange, MountingΦ82.5X8	B2	Φ25.4Shaft, Parallel Key6.35X6.35X31.75	TA202	M22X1.5Manifold4XM8, M14X1.5	F	Opposite
				B4	Φ32Shaft, Parallel Key10X8X45	TA805	7/8-140-ringManifold 4X5/16-18UNC, 7/16-20UNF		
				J	Φ25.4Shaft, Splined KeySAE 6B				

EPMZH SERIES Orbit Hydraulic Motor

EPMZHR SERIES Motor is design of Orbit Motor with axial oil distribution.
The design adapts the advanced Gerolor gear set structure that realizes automatic compensation in operating under high pressure and features reliable and smooth operation, high efficiency and long service life.

Characteristics features:

- Application of advanced gerolor gear set design that features start-up under low pressure, smooth running and high efficiency.
- Shaft seal of high pressure tolerance applied to enable the use in parallel or in series.
- Special design in the coupling shaft system to realize the long service life.
- Special design and setting of the oil distribution system to reduce the noise level.
- Compact-size with easy installation.

TECHNICAL SPECIFICATION

Type		EPMZH 200	EPMZH 250	EPMZH 315	EPMZH 400	EPMZH 500
Displacement (cm³ / rev)		203.2	255.9	316.1	406.4	489.2
Speed(rpm)	Rated	290	230	180	145	120
	Continuous	366	290	236	183	155
	Intermittent	439	348	282	220	184
Torque(N.m)	Rated	400	500	600	705	670
	Continuous	510	621	740	850	830
	Intermittent	579	702	827	990	1040
	Peak	651	790	980	1092	1170
Output Power(kW)	Continuous	16	16	14	12.5	11
	Intermittent	18.5	18.5	15.5	15.0	14
Pressure Drop(Mpa)	Rated	14.0	14.0	14.0	12.5	10.0
	Continuous	17.5	17.5	17.5	15.5	12.5
	Intermittent	20	20	20	19	16
	Peak	22.5	22.5	22.5	21	18
Flow(L/min)	Rated	60	60	60	60	60
	Continuous	75	75	75	75	75
	Intermittent	90	90	90	90	90
Weight (kg)		10.5	11	11.5	12.3	13.0

Type		Max.inlet pressure(MPa)
EPMZH200-500 (MPa)	Continuous	200
	Intermittent	225
	Peak	250

◎ Rated Speed / Rated Torque: Speed / Torque value of the operating motor under rated flow and pressure
◎ Continuous value: Max. value of the operating motor in continuous working condition..
◎ Intermittent value: Max. value of the motor when working 6 seconds per minute.
◎ Peak value: Max. value of the motor when working for 0.6 second per minute.

The above data are measured and obtained under specific experimental conditions, and only for product description purposes. The data should not be interpreted as warranted characteristics in legal term. Ningbo Intermot (Ningbo Oil Control Hydraulic Co., Ltd.)reserves the rights to implement modifications without notice. All Partial or total reproduction and copy of such data without formal authorization is strictly forbidden.

EPMZH MOUNTING DATA

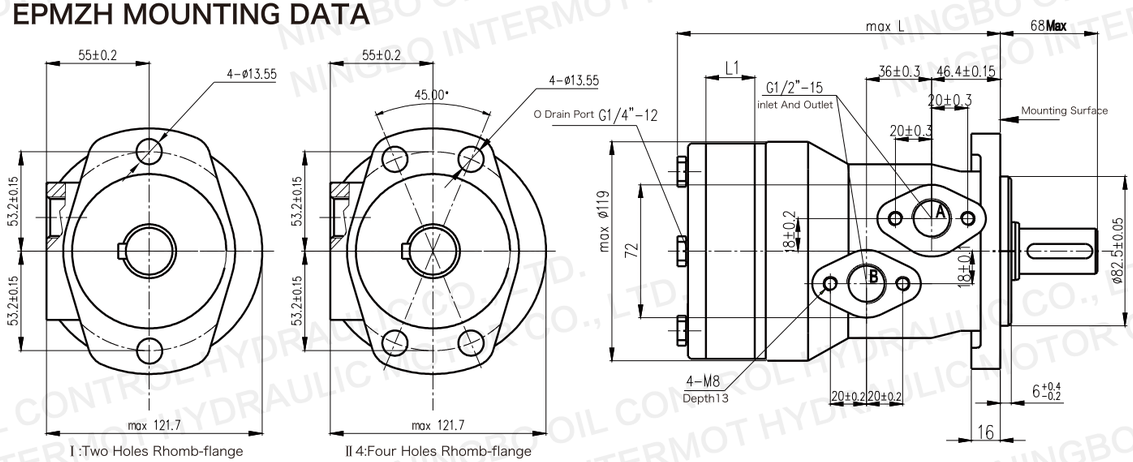

Type	L	L1
EPMZH－200	168	27
EPMZH－250	175	34
EPMZH－315	184	42
EPMZH－400	195	54
EPMZH－500	206	65

SHAFT EXTENSION DIMENSIONS FOR EPMZH

Standard Parallel Key Shaft: B1
Cylindrical Shaft: Φ32
Parallel Key: 10X8X45

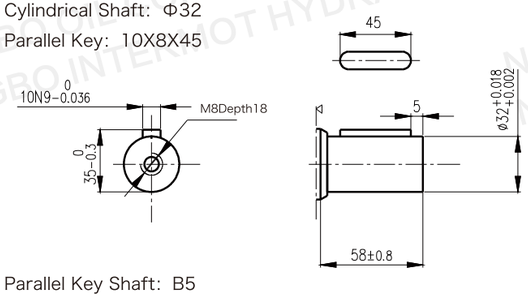

Parallel Key Shaft: B2
Cylindrical Shaft: Φ35
Parallel Key: 10X8X45

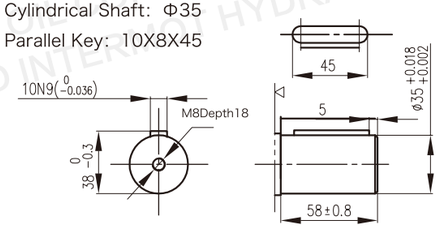

Parallel Key Shaft: B5
Cylindrical Shaft: Φ31.75
Parallel Key: 7.96X7.96X31.75

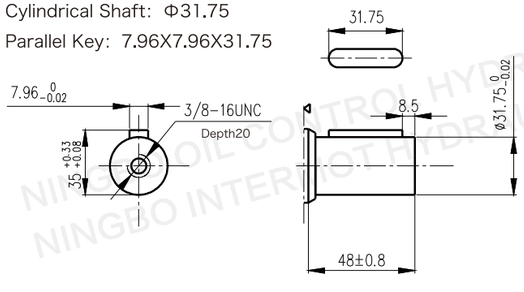

Standard Splined Key Shaft: J
Cylindrical Shaft: Φ35
Splined Key: Φ25.4

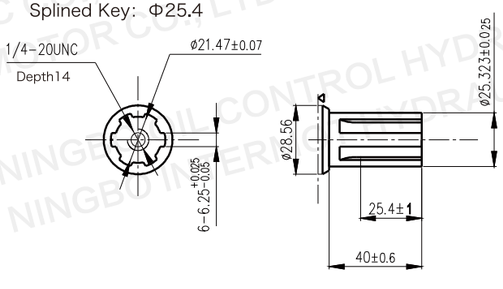

PERMISSABLE PRESSURE LIMIT OF OUTPUT SHAFT SEAL

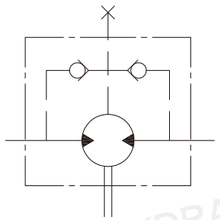

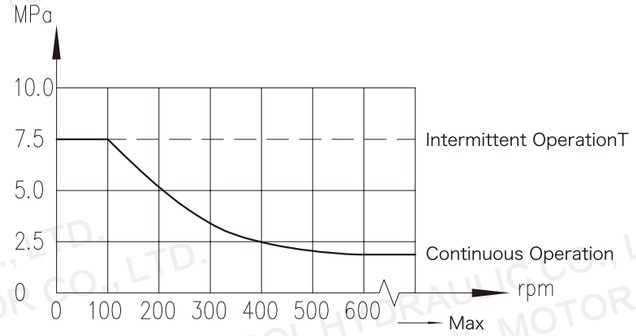

In applications without drain-line, pressure on output shaft seal is slightly higher than in the back-flow drain.In applictions with drain-line, pressure on output shaft seal is the same with the pressure in the drain-line.

DIRECTION OF SHAFT ROTATION:STANDARD

When facing shaft end of motor,shaft to rotate:Clockwise when port “A” is pressurized.Counter- clockwise when port “B” is pressurized.

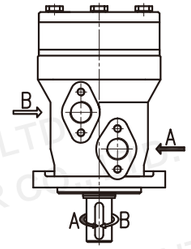

ORDER CODES

1		2		3		4		5		6
EPMZH	—		—		—		—		—	

Pos.1	2	3		4		5		6	
Structure Code	Displacement	Flange & Mounting		Output Shaft		Oil Ports & Drain Port		Rotation Direction	
EPMZH	200	I	2-Φ13.5Rhomb-flange, MountingΦ82.5X6	BI	ShaftΦ32, Parallel Key10X8X45	TA101	G1/2Manifold, 4-M8, G1/4	Omit	Standard
	250			B2	ShaftΦ35, Parallel Key10X8X45	TA202	M22X1.5Manifold, 4-M8, M14X1.5	F	Opposite
	315	Ⅱ4	4-Φ13.5Rhomb-flange, MountingΦ82.5X6	B5	ShaftΦ31.75, Parallel Key7.96X7.96X31.75				
	400					TA805	7/8-140-O-ringManifold 4-48, 7/16-20UNF		
	500			J	ShaftΦ25.4, Splined KeySAE 6B				

EPMZ1 SERIES ORBIT HYDRAULIC MOTOR

EPMZ1 SERIES Motor is a low volumn, economical and compact design of Orbit Motor with axial oil distribution.
The design adapts the Gerolor gear set structure that features compact size, high power density and light weight.

Charateristics Features:

- Advanced processing and treatments of the Gerotor gear sets, which provides compact size, high efficiency and long service life of the motor.
- Shaft seal of high pressure tolerance applied to enable the use in parallel or in series.
- Advanced structure design, with improved power density charateristics
- The output shaft is equipped with 2 tapered bearings that allow some radial forces

TECHNICAL SPECIFICATION

Type		EPMZ1 50	EPMZ1 80	EPMZ1 100	EPMZ1 125	EPMZ1 160	EPMZ1 200	EPMZ1 250	EPMZ1 315	EPMZ1 400
Displacement (cm³ / rev)		51.77	77.7	96.2	117.9	155.5	189.9	231	311.7	386.2
Speed(rpm)	Continuous	879	850	589	475	370	296	237	189	149
	Intermittent	975	827	673	594	463	370	297	236	185
Torque(N.m)	Continuous	81	129	161	202	245	286	360	406	435
	Intermittent	108	171	213	268	342	390	456	505	533
Output Power (kW)	Continuous	7	9.1	9	9.1	8.7	8.1	8.2	7.2	6.1
	Intermittent	8.9	11.8	11.9	11.8	11.9	10.9	10.1	8.6	7.2
Pressure Drop (Mpa)	Rated	12.5	12.5	12.5	12.5	12.5	11	11	11	10
	Continuous	14	14	14	14	14	14	12	11	10
	Intermittent	16.5	16.5	16.5	16.5	16.5	16.5	14	12.5	10.5
Flow (L/min)	Continuous	45	60	60	60	60	60	60	60	60
	Intermittent	50	75	75	75	75	75	75	75	75
Weight (kg)		5.6	5.7	5.9	6	6.2	6.4	6.6	6.9	7.4

EPMZ1 MOUNTING DATA

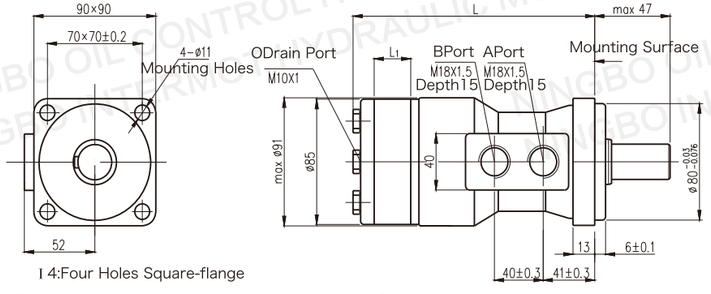

Type	L	L1
EPMZ1-50	132	7
EPMZ1-80	135.5	10.5
EPMZ1-100	138	13
EPMZ1-125	141	16
EPMZ1-160	146	21
EPMZ1-200	151	26
EPMZ1-250	157	32
EPMZ1-315	167	42
EPMZ1-400	177	52

I 4:Four Holes Square-flange

SHAFT EXTENSION DIMENSIONS FOR EPMZ1

Standard Parallel Key Shaft: B1
Cylindrical Shaft: Φ25
Parallel Key: 8X7X28

Splined Key Shaft: J1
Straight-sided Spline: 6-25X21X5

Splined Key Shaft: J2
Straight-sided Spline: 6-25X21X6

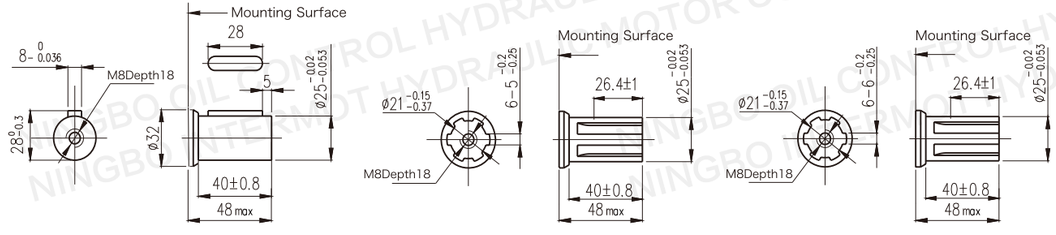

EPMZ2&EPMZ3 SERIES ORBIT HYDRAULIC MOTOR

EPMZ2&EPMZ3 series motors adopt shaft oil distribution design with a radial ball

Charateristics Features:

- Separation of oil distribution mechanism and torque output mechanism makes the distribution system free from any load,but only play the role of distribution,and makes the coupling purely without any abrasion. Advantage:little leakage,high volume efficiency and long service life.
- Adopts dual bearing design ,bear larger radial load force.
- Advanced gerotor gear set design,bear high back pressure used either in parallel or in series.
- Advanced construction design,high power and weight.

TECHNICAL SPECIFICATION

Type		EPMZ2 125	EPMZ2 160	EPMZ2 200	EPMZ2 250	EPMZ2 315	EPMZ2 400	EPMZ3 500	EPMZ3 630
Displacement (cm³ / rev)		124.1	164.7	200	248.3	319.2	400	518	666
Speed(rpm)	Continuous	400	310	250	200	150	125	160	125
	Intermittent	500	400	310	250	200	150	200	160
Torque(N.m)	Continuous	215	285	347	385	495	477	772	993
	Intermittent	26	355	459	470	568	620	1054	1355
Output Power (kW)	Continuous	8.8	9	9	8	8	6	13	13
	Intermittent	11	11	11	10	9	9	17	17
Pressure Drop (Mpa)	Rated	14	14	14	12.5	12.5	10	12.5	12.5
	Continuous	17	17	17	14	14	12.5	16	16
Flow (L/min)	Continuous	20	20	20	20	20	20	20	20
	Intermittent	25	25	25	25	25	25	25	25
Weight (kg)		7.2	7.8	8.1	8.4	9.0	9.5	17.5	18.5

◎ Rated Speed / Rated Torque: Speed / Torque value of the operating motor under rated flow and pressure
◎ Continuous value: Max. value of the operating motor in continuous working condition..
◎ Intermittent value: Max. value of the motor when working 6 seconds per minute.
◎ Peak value: Max. value of the motor when working for 0.6 second per minute.

EPMZ2 MOUNTING DATA

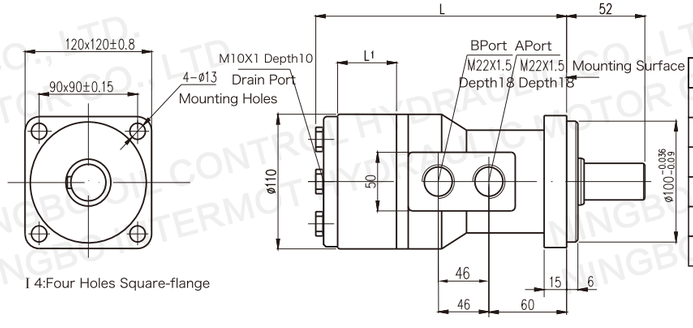

Type	L	L1
EPMZ2-125	180	25
EPMZ2-160	176	21
EPMZ2-200	182	27
EPMZ2-250	189	34
EPMZ2-315	197	42
EPMZ2-400	209	54

I 4:Four Holes Square-flange

SHAFT EXTENSION DIMENSIONS FOR EPMZ2

Standard Parallel Key Shaft: B1
Cylindrical Shaft: Φ25
Parallel Key: 8X7X32

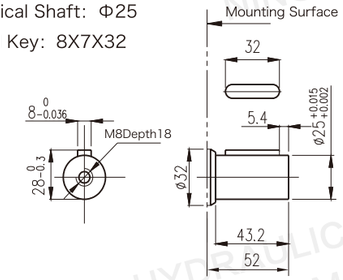

Parallel Key Shaft: B3
Cylindrical Shaft: Φ30
Parallel Key: 10X8X40

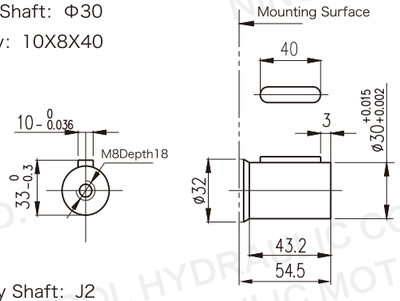

Splined Key Shaft: J1
Straight-sided Spline: 6-30X26X8

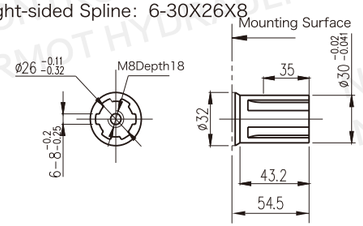

Splined Key Shaft: J2
Straight-sided Spline: 6-30X26X6

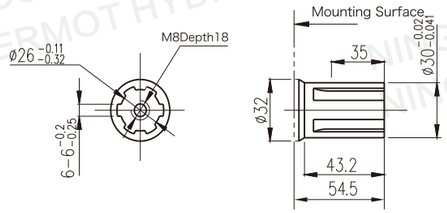

EPMZ3 MOUNTING DATA

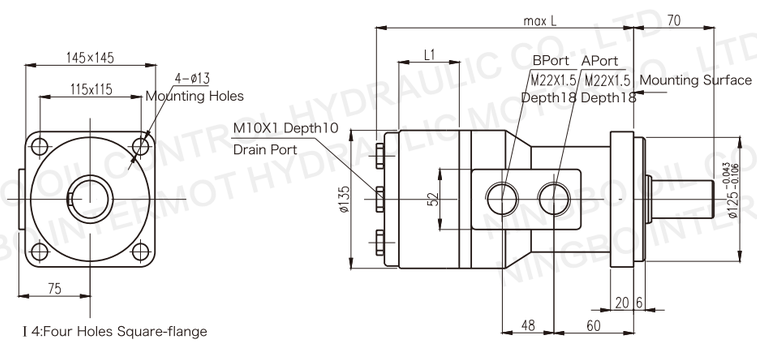

Type	L	L1
EPMZ3-500	214.5	42
EPMZ3-630	226.5	54

SHAFT EXTENSION DIMENSIONS FOR EPMZ3

Standard Splined Key Shaft: J
Splined Key: 8-43X36X7

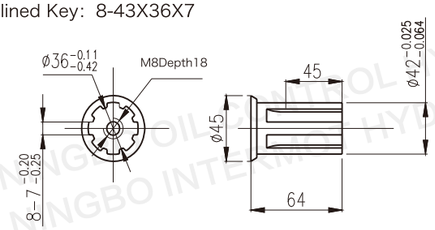

PERMISSABLE PRESSURE LIMIT OF OUTPUT SHAFT SEAL

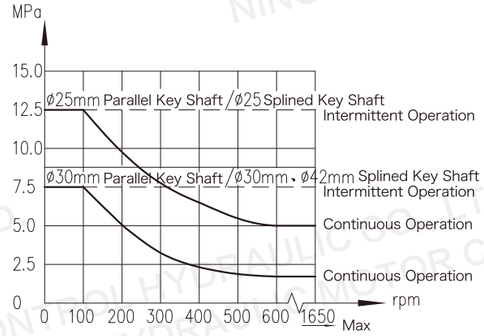

In applications without drain-line, pressure on output shaft seal is slightly higher than in the back-flow drain.
In applictions with drain-line, pressure on output shaft seal is the same with the pressure in the drain-line.

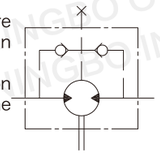

DIRECTION OF SHAFT ROTATION:STANDARD

When facing shaft end of motor,shaft to rotate:Clockwise when port “A” is pressurized.Counter- clockwise when port “B” is pressurized.

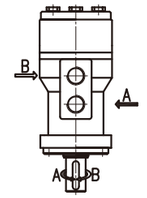

STATUS OF THE SHAFT’S RADIAL FORCE

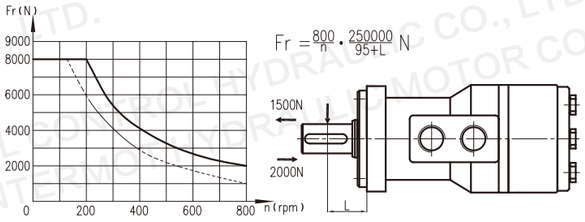

Diameter Of Coupling Shaft Φ25&Φ25.4
Diameter Of Coupling Shaft Φ30&Φ42

Fr=Radial Force (N)
L=Distance (mm)
n=Speed (rpm)
Max.Force Load
Rhomb-flange L=30mm
Square-flange L=24mm

ORDER CODES

1		2		3		4		5		6
EPMZ		—		—		—		—		—

Pos.1	2	3		4		5		6	
Structure Code	Displacement	Flange & Mounting		Output Shaft		Oil Ports & Drain Port		Rotation Direction	
1	50 80 100 125 160 200 250 315 400	I 4	4-Φ11Square-flange, MountingΦ80X5	BI J1 J2	ShaftΦ25, Parallel Key8X7X28 ShaftΦ25, Splined Key6-25X21X5 ShaftΦ25, Splined Key6-25X21X6	TA303 TA203 TA101	M18X1.5,M10X1 M22X1.5,M10X1 G1/2,G1/4	Omit F	Standard Opposite
2	80 100 125 160 200 250 315 400	I 4	4-Φ13Square-flange, MountingΦ100X6	BI B3 J J2	ShaftΦ25, Parallel Key8X7X32 ShaftΦ30, Parallel Key10X8X40 ShaftΦ30, Splined Key6-30X26X8 ShaftΦ30, Splined Key6-30X26X6	TA203	M22X1.5,M10X1		
3	500 630	I 4	4-Φ13Square-flange, MountingΦ125X6	J	ShaftΦ42, Splined Key8-42X36X7	TA203	M22X1.5, M10X1		

EPMZS SERIES ORBIT HYDRAULIC MOTOR

EPMZS SERIES Motor applies the advanced Gerolor gear set design with disc oil distribution. The main

- Application of advanced gerolor gear set design that features start-up under low pressure, smooth running and high efficiency.
- Comparatively high pressure tolerance with high output torque. The output shaft is equipped with tapered roller bearings that allow high axial and radial forces. The Type features excellent high pressure performance and high torque in wide range of applications
- Advanced design of gerolor gear set that realizes automatic compensation in operating under high pressure resulting in reliable and smooth operation, high efficiency and long service life.
- Advanced deign of disc oil distribution system features enhanced oil distribution reliability and precision which is the fundamental basis of high volumetric efficiency, long service life, smooth and stable running of the motor

TECHNICAL SPECIFICATION

Type		EPMZS 80	EPMZS 100	EPMZS 125	EPMZS 160	EPMZS 200	EPMZS 250	EPMZS 315	EPMZS 375
Displacement (cm³ / rev)		80.6	100.8	125	157.2	200	252	314.5	370
Speed(rpm)	Rated	675	540	432	337	270	216	171	145
	Continuous	800	748	600	470	375	300	240	200
	Intermittent	988	900	720	560	450	360	280	240
Torque(N.m)	Rated	175	220	273	316	340	450	560	536
	Continuous	190	240	310	316	400	450	560	536
	Intermittent	240	300	370	430	466	540	658	645
	Peak	260	320	400	472	650	690	740	751
Output Power (kW)	Rated	12.4	12.4	12.4	11.2	9.6	10.2	10	8.6
	Continuous	15.9	18.8	19.5	15.6	15.7	14.1	14.1	11.8
	Intermittent	20.1	23.5	23.2	21.2	18.3	17.0	18.9	17
Pressure Drop (Mpa)	Rated	16	16	16	15	12.5	12.5	12	10
	Continuous	17.5	17.5	17.5	15	14	12.5	12	10
	Intermittent	21	21	21	21	16	16	14	12
	Peak	22.5	22.5	22.5	22.5	22.5	20	18.5	14
Flow(L/min)	Continuous	65	75	75	75	75	75	75	75
	Intermittent	80	90	90	90	90	90	90	90
Max.inlet pressure	Rated	21	21	21	21	21	21	21	21
	Continuous	25	25	25	25	25	25	25	25
	Intermittent	30	30	30	30	30	30	30	30
Weight (kg)		9.8	10	10.3	10.7	11.1	11.6	12.3	12.6

◎ Rated Speed / Rated Torque: Speed / Torque value of the operating motor under rated flow and pressure

◎ Continuous value: Max. value of the operating motor in continuous working condition..

◎ Intermittent value: Max. value of the motor when working 6 seconds per minute.

◎ Peak value: Max. value of the motor when working for 0.6 second per minute.

The above data are measured and obtained under specific experimental conditions, and only for product description purposes. The data should not be interpreted as warranted characteristics in legal term. Ningbo Intermot (Ningbo Oil Control Hydraulic Co., Ltd.)reserves the rights to implement modifications without notice. All Partial or total reproduction and copy of such data without formal authorization is strictly forbidden.

See PAGE 21 For Mounting Data

EPMZSY SERIES ORBIT HYDRAULIC MOTOR

EPMZY SERIES Motor applies the advanced Gerolor gear set design with disc oil distribution. The main

- Application of advanced gerolor gear set design that features start-up under low pressure, smooth running and high efficiency.
- Comparatively high pressure tolerance with high output torque. The output shaft is equipped with tapered roller bearings that allow high axial and radial forces. The Type features excellent high pressure performance and high torque in wide range of applications
- Advanced design of gerolor gear set that realizes automatic compensation in operating under high pressure resulting in reliable and smooth operation, high efficiency and long service life.
- Advanced deign of disc oil distribution system features enhanced oil distribution reliability and precision which is the fundamental basis of high volumetric efficiency, long service life, smooth and stable running of the motor
- Sharing the same structure and mounting dimensions with EPMZS series
- 15-20% performance upgrade based on the EPMZS Types in terms of Output torque, maximum output power, pressure limit, etc..

TECHNICAL SPECIFICATION

Type		EPMZSY 80	EPMZSY 100	EPMZSY 125	EPMZSY 160	EPMZSY 200	EPMZSY 250	EPMZSY 315	EPMZSY 400	EPMZSY 475
Displacement (cm³ / rev)		80.6	100.8	125	154	194	243	311	394	475
Speed(rpm)	Rated	675	540	432	337	270	216	171	135	110
	Continuous	800	748	600	470	375	300	240	185	155
	Intermittent	988	900	720	560	450	360	280	225	185
Torque(N.m)	Rated	175	220	273	445	505	620	700	765	780
	Continuous	225	290	365	485	586	708	880	880	910
	Intermittent	250	320	400	540	645	806	960	960	960
Output Power (kW)	Rated	12	12.4	12.4	12.4	12.4	12.4	11.2	9.6	8.6
	Continuous	16	18	18	18.1	18.1	18	17	11	9
	Intermittent	20	22	23	25	24	23.8	20.2	12	11
Pressure Drop (Mpa)	Rated	16	16	16	19	19	18	16	14	12
	Continuous	20.5	20.5	20.5	21	21	20	20	16	14
	Intermittent	22.5	22.5	22.5	22.5	22.5	22.5	22.5	17.5	15
	Peak	29.5	29.5	29.5	28	27	27	26	21	17.5
Flow(L/min)	Continuous	65	75	75	75	75	75	75	75	75
	Intermittent	80	90	90	90	90	90	90	90	90
Max.inlet pressure	Rated	21	21	21	21	21	21	21	21	21
	Continuous	25	25	25	25	25	25	25	25	25
	Intermittent	30	30	30	30	30	30	30	30	30
Weight (kg)		9.8	10	10.3	10.7	11.1	11.6	12.3	13.2	14.3

◎ Rated Speed / Rated Torque: Speed / Torque value of the operating motor under rated flow and pressure

◎ Continuous value: Max. value of the operating motor in continuous working condition..

◎ Intermittent value: Max. value of the motor when working 6 seconds per minute.

◎ Peak value: Max. value of the motor when working for 0.6 second per minute.

The above data are measured and obtained under specific experimental conditions, and only for product description purposes. The data should not be interpreted as warranted characteristics in legal term. Ningbo Intermot (Ningbo Oil Control Hydraulic Co., Ltd.)reserves the rights to implement modifications without notice. All Partial or total reproduction and copy of such data without formal authorization is strictly forbidden.

EPMZS&EPMZSY MOUNTING DATA

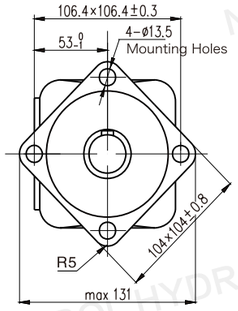

Ⅱ:Four Holes Square-flange

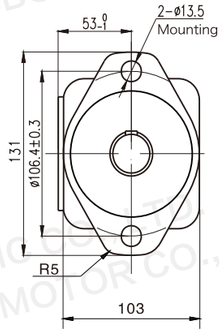

Ⅰ4:Two Holes Rhomb-flange

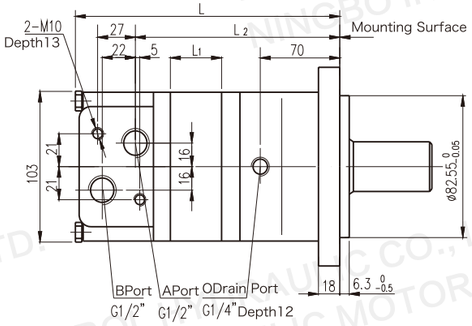

Type	L	L1	L2
EPMZS-80	167	13	123.2
EPMZS-100	171	17	127.2
EPMZS-125	176	22	132.2
EPMZS-160	181.5	27.5	137.7
EPMZS-200	189	35.1	145.2
EPMZS-250	201	47	157.2
EPMZS-315	213	59	169.2
EPMZS-375	225	71	181.2

Type	L	L1	L2
EPMZSY-80	170	16	126.5
EPMZSY-100	174	20	130.5
EPMZSY-125	179	25	135.5
EPMZSY-160	181	27	137.5
EPMZSY-200	188	34	144.5
EPMZSY-250	196	42	152.5
EPMZSY-315	208	54	164.5
EPMZSY-400	223	69	179.5
EPMZSY-475	237	83	193.5

SHAFT EXTENSION DIMENSIONS FOR EPMZS&EPMZSY

Standard Parallel Key Shaft: B1
Cylindrical Shaft: Φ25
Parallel Key: 8X7X32

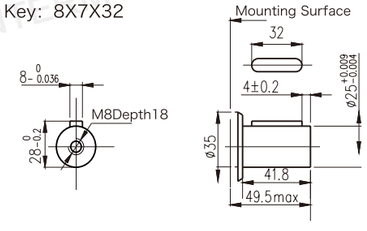

Standard Parallel Key Shaft: J
Parallel Key: Φ25.4 SAE6B

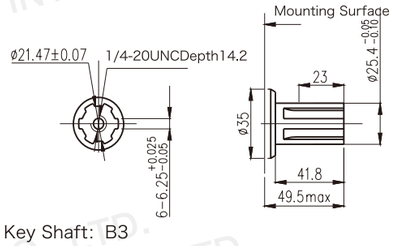

Parallel Key Shaft: B2
Cylindrical Shaft: Φ25.4
Parallel Key: 6.35X6.35X25.4

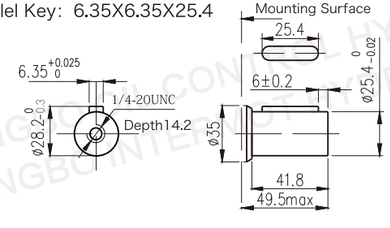

Parallel Key Shaft: B3
Cylindrical Shaft: Φ32
Parallel Key: 10X8X45

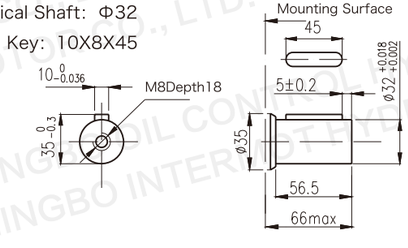

PERMISSABLE PRESSURE LIMIT OF OUTPUT SHAFT SEAL

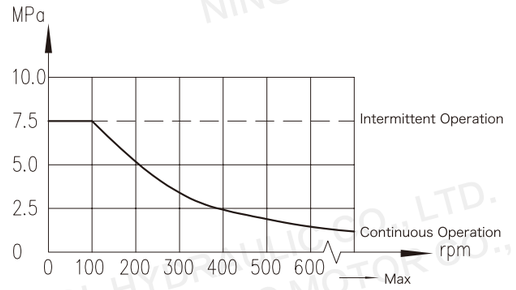

In applications without drain-line, pressure on output shaft seal is slightly higher than in the back-flow drain.
In applictions with drain-line, pressure on output shaft seal is the same with the pressure in the drain-line.

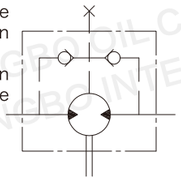

DIRECTION OF SHAFT ROTATION:STANDARD

When facing shaft end of motor,shaft to rotate:Clockwise when port "A" is pressurized.Counter- clockwise when port "B" is pressurized.

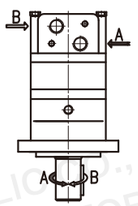

STATUS OF THE AXIAL&RODIAL FORCES ON THE OUTPUT SHAFT

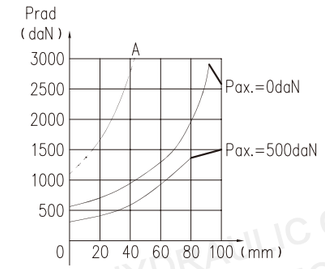

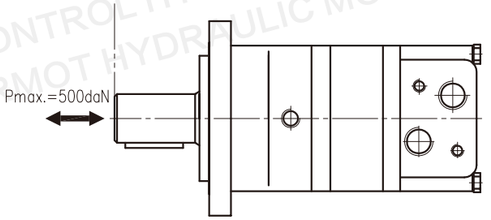

The output shaft runs with tapered bearings that allow comparatively high axial and radial forces. Curve 'A' indicates the maximum radial load on the output shaft. Any shaft load exceeding the values quoted in the curve will involve a risk a breakage. The two other curves apply to a B10 bearing life of 3000 hours at 200 RPM.

ORDER CODES

1		2		3		4		5		6
EPMZS&EPMZSY	—		—		—		—		—	

Pos.1	2		3		4		5		6	
Structure Code	Displacement		Flange & Mounting		Output Shaft		Oil Ports & Drain Port		Rotation Direction	
	EPMZS	EPMZSY								
EPMZS & EPMZSY	80	80	I	2-Φ13.5Rhomb-flange, Φ106.4, MountingΦ82.5X6.3	B1	Φ25Shaft, Parallel Key8X7X32	TA1O1	G1/2Manifold2XM10, G1/4	Omit	Standard
	100	100			B2	Φ25.4Shaft, Parallel Key6.35X6.35X25.4	TA2O2	M22X1.5Manifold4XM10, M14X1.5	F	Opposite
	125	125			B3	Φ32Shaft, Parallel Key10X8X45	TA8O5	7/8-14UNF, O-ringManifold2X3/8-16, 7/16-20UNF		
	160	160			J	Φ25.4Shaft, Splined KeySAE 6B				
	200	200								
	250	250								
	315	315	I4	4-ΦSquare-flange, Φ106.4, MountingΦ82.5X6.3						
	375	400								
		475								

EPMZT SERIES Orbit Hydraulic Motor

EPMZT SERIES Motor applies the advanced Gerolor gear set design with disc oil distribution. The main

- Application of advanced gerolor gear set design that features start-up under low pressure, smooth running and high efficiency.
- Comparatively high pressure tolerance with high output torque. The output shaft is equipped with tapered roller bearings that allow high axial and radial forces. The Type features excellent high pressure performance and high torque in wide range of applications
- Advanced design of gerolor gear set that realizes automatic compensation in operating under high pressure resulting in reliable and smooth operation, high efficiency and long service life.
- Advanced deign of disc oil distribution system features enhanced oil distribution reliability and precision which is the fundamental basis of high volumetric efficiency, long service life, smooth and stable running of the motor

TECHNICAL SPECIFICATION

Type		EPMZT 160	EPMZT 200	EPMZT 230	EPMZT 250	EPMZT 315	EPMZT 400	EPMZT 500	EPMZT 630	EPMZT 800
Displacement (cm³ / rev)		161.1	201.4	232.5	251.8	326.3	410.9	523.6	629.1	801.8
Speed(rpm)	Rated	470	475	412	381	294	228	183	150	121
	Continuous	625	625	536	500	380	305	240	196	154
	Intermittent	780	750	643	600	460	365	285	233	185
Torque(N.m)	Rated	379	471	530	582	758	896	1063	1156	1207
	Continuous	470	590	670	730	950	1080	1220	1318	1464
	Intermittent	560	710	821	880	1140	1260	1370	1498	1520
	Peak	669	838	958	1036	1346.3	1450.3	1643.8	1618.8	1665
Output Power (kW)	Rated	18.7	23.4	23.2	23.2	23.3	21.4	20.4	18.2	15.3
	Continuous	27.7	34.9	34.7	34.5	34.9	31.2	28.8	25.3	22.2
	Intermittent	32	40	40	40	40	35	35	27.5	26.8
Pressure Drop (Mpa)	Rated	16	16	16	16	16	15	14	12	10.5
	Continuous	20	20	20	20	20	18	16	14	12.5
	Intermittent	24	24	24	24	24	21	18	16	13
	Peak	28	28	28	28	28	24	21	19	16
Flow(L/min)	Rated	80	100	100	100	100	100	100	100	100
	Continuous	100	125	125	125	125	125	125	125	125
	Intermittent	125	150	150	150	150	150	150	150	150
Max.inlet pressure	Rated	21	21	21	21	21	21	21	21	21
	Continuous	21	21	21	21	21	21	21	21	21
	Intermittent	25	25	25	25	25	25	25	25	25
	Peak	30	30	30	30	30	30	30	30	30
Weight (kg)		19.5	20	20.4	20.5	21	22	23	24	25

◎ Rated Speed / Rated Torque: Speed / Torque value of the operating motor under rated flow and pressure
◎ Continuous value: Max. value of the operating motor in continuous working condition..
◎ Intermittent value: Max. value of the motor when working 6 seconds per minute.
◎ Peak value: Max. value of the motor when working for 0.6 second per minute.

The above data are measured and obtained under specific experimental conditions, and only for product description purposes. The data should not be interpreted as warranted characteristics in legal term. Ningbo Intermot (Ningbo Oil Control Hydraulic Co., Ltd.)reserves the rights to implement modifications without notice. All Partial or total reproduction and copy of such data without formal authorization is strictly forbidden.

EPMZT MOUNTING DATA

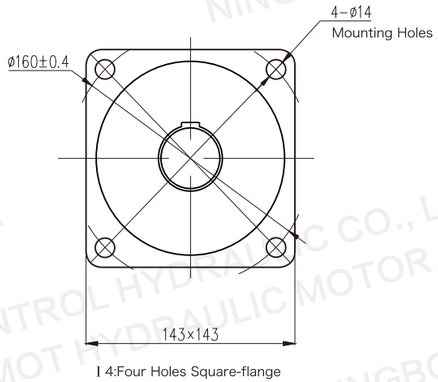

I 4:Four Holes Square-flange

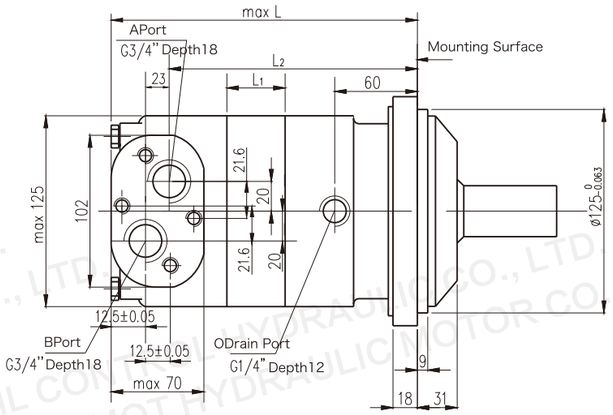

Type	L	L1	L2
EPMZT160	193	17	142.5
EPMZT200	197	21	146.5
EPMZT250	204	14	152.5
EPMZT315	210	20	158.5
EPMZT400	217	27	165.5
EPMZT500	225	35	173.5
EPMZT630	237	47	185.5
EPMZT800	248	58	196.5

SHAFT EXTENSION DIMENSIONS FOR EPMZT

Standard Parallel Key Shaft: B1
Cylindrical Shaft: Φ40
Parallel Key: 12X8X70

Parallel Key Shaft: B2
Cylindrical Shaft: Φ38.1
Parallel Key: 9.52X9.52X57.15

Involute Splined Key Shaft: K
Involute Splined Key: 17-DP12/24

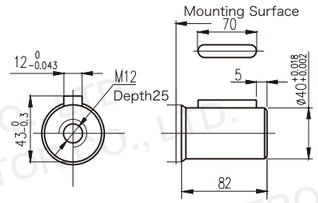

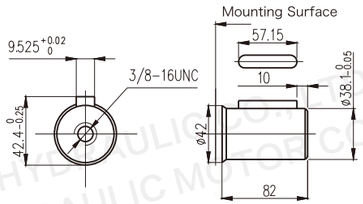

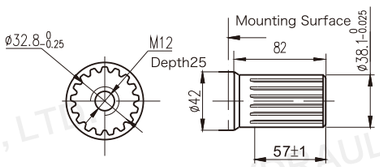

PERMISSABLE PRESSURE LIMIT OF OUTPUT SHAFT SEAL

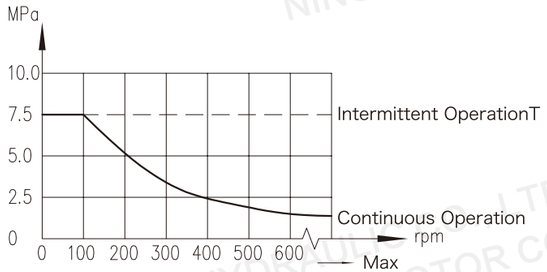

In applications without drain-line, pressure on output shaft seal is slightly higher than in the back-flow drain.
In applictions with drain-line, pressure on output shaft seal is the same with the pressure in the drain-line.

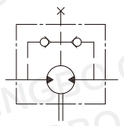

DIRECTION OF SHAFT ROTATION:STANDARD

When facing shaft end of motor,shaft to rotate:Clockwise when port "A" is pressurized.Counter-clockwise when port "B" is pressurized.

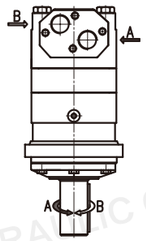

STATUS OF THE AXIAL&RODIAL FORCES ON THE OUTPUT SHAFT

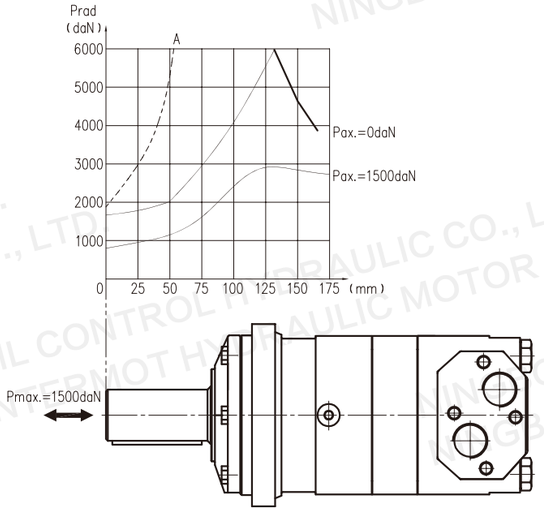

The output shaft runs with tapered bearings that allow comparatively high axial and radial forces. Curve 'A' indicates the maximum radial load on the output shaft. Any shaft load exceeding the values quoted in the curve will involve a risk a breakage. The two other curves apply to a B10 bearing life of 3000 hours at 200 RPM.

ORDER CODES

1		2		3		4		5		6
EPMZT	—		—		—		—		—	

Pos.1	2	3		4		5		6	
Structure Code	Displacement	Flange & Mounting		Output Shaft		Oil Ports & Drain Port		Rotation Direction	
EPMZT	160 200 250 315 400 500 630 800	I 4	4-Φ14Square-flange, Φ160, MountingΦ125X9	BI B2 K	ShaftΦ40, Parallel Key12X8X70 ShaftΦ38.1, Parallel Key9.52X9.52X57.15 ShaftΦ38.1, Splined Key17-DP12/24	TA401	G3/4Manifold, 4-M10, G1/4	Omit F	Standard Opposite

EPMZV SERIES Orbit Hydraulic Motor

EPMZV SERIES Motor applies the advanced Gerolor gear set design with disc oil distribution. The main

- Application of advanced gerolor gear set design that features start-up under low pressure, smooth running and high efficiency.
- Comparatively high pressure tolerance with high output torque. The output shaft is equipped with tapered roller bearings that allow high axial and radial forces. The Type features excellent high pressure performance and high torque in wide range of applications
- Advanced design of gerolor gear set that realizes automatic compensation in operating under high pressure resulting in reliable and smooth operation, high efficiency and long service life.
- Advanced deign of disc oil distribution system features enhanced oil distribution reliability and precision which is the fundamental basis of high volumetric efficiency, long service life, smooth and stable running of the motor

TECHNICAL SPECIFICATION

Type		EPMZV 315	EPMZV 400	EPMZV 500	EPMZV 630	EPMZV 800	EPMZV 1000
Displacement (cm³ / rev)		333	419	518	666	801	990
Speed(rpm)	Rated	335	270	215	170	140	105
	Continuous	510	500	400	320	250	200
	Intermittent	630	600	480	380	300	240
Torque(N.m)	Rated	730	1020	1210	1422	1590	2015
	Continuous	920	1180	1460	1660	1880	2015
	Intermittent	1110	1410	1760	1940	2110	2280
	Peak	1290	1640	2050	2210	2470	2400
Output Power (kW)	Continuous	38	47	47	40	33	28.6
	Intermittent	46	56	56	56	44	40
Pressure Drop (Mpa)	Rated	16	16	16	16	14	14
	Continuous	20	20	20	18	16	14
	Intermittent	24	24	24	21	18	16
	Peak	28	28	28	24	21	18
Flow(L/min)	Rated	110	110	110	110	110	110
	Continuous	160	200	200	200	200	200
	Intermittent	200	240	240	240	240	240
Max.inlet pressure	Rated	21	21	21	21	21	21
	Continuous	21	21	21	21	21	21
	Intermittent	25	25	25	25	25	25
	Peak	30	30	30	30	30	30
Weight (kg)		31.8	32.6	33.5	34.9	36.5	38.6

◎ Rated Speed / Rated Torque: Speed / Torque value of the operating motor under rated flow and pressure
◎ Continuous value: Max. value of the operating motor in continuous working condition..
◎ Intermittent value: Max. value of the motor when working 6 seconds per minute.
◎ Peak value: Max. value of the motor when working for 0.6 second per minute.

The above data are measured and obtained under specific experimental conditions, and only for product description purposes. The data should not be interpreted as warranted characteristics in legal term. Ningbo Intermot (Ningbo Oil Control Hydraulic Co., Ltd.)reserves the rights to implement modifications without notice. All Partial or total reproduction and copy of such data without formal authorization is strictly forbidden.

EPMZV MOUNTING DATA

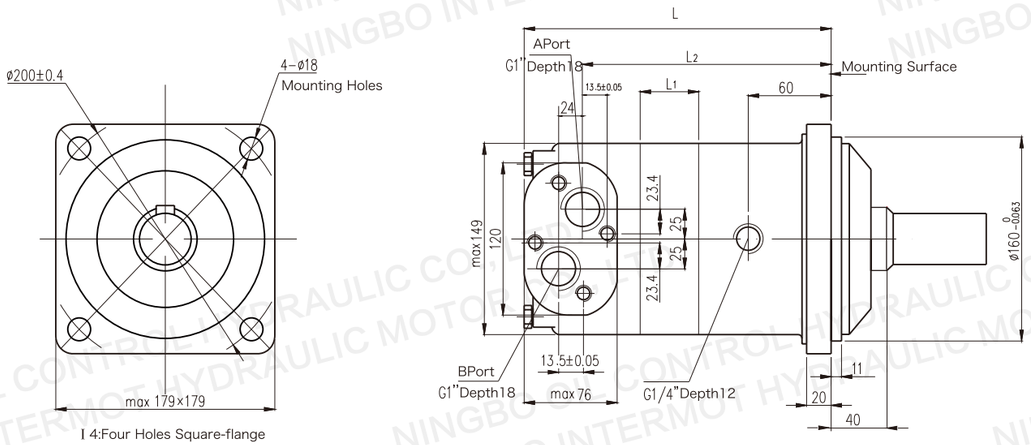

Type	L	L1	L2
EPMZV315	217	20	161.5
EPMZV400	224	27	168.5
EPMZV500	232	35	176.5
EPMZV630	244	47	188.5
EPMZV800	255	58	199.5
EPMZV1000	271	74	215.5

SHAFT EXTENSION DIMENSIONS FOR EPMZV

Parallel Key Shaft: B1
Cylindrical Shaft: Φ40
Parallel Key: 12X8X63

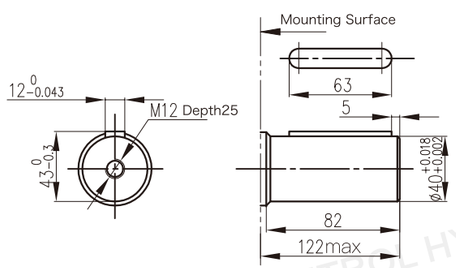

Parallel Key Shaft: B2
Cylindrical Shaft: Φ50
Parallel Key: 14X9X70

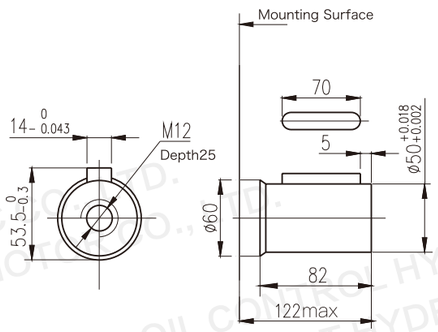

PERMISSABLE PRESSURE LIMIT OF OUTPUT SHAFT SEAL

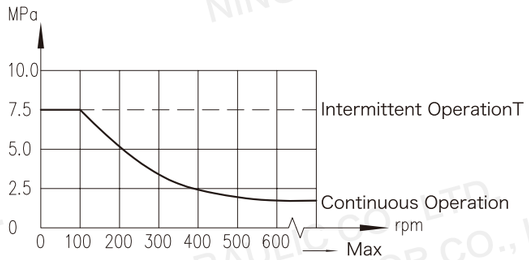

In applications without drain-line, pressure on output shaft seal is slightly higher than in the back-flow drain.
In applictions with drain-line, pressure on output shaft seal is the same with the pressure in the drain-line.

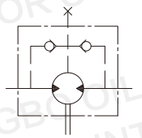

DIRECTION OF SHAFT ROTATION:STANDARD

When facing shaft end of motor,shaft to rotate:Clockwise when port "A" is pressurized.Counter- clockwise when port "B" is pressurized.

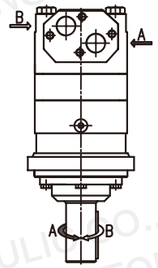

STATUS OF THE AXIAL&RODIAL FORCES ON THE OUTPUT SHAFT

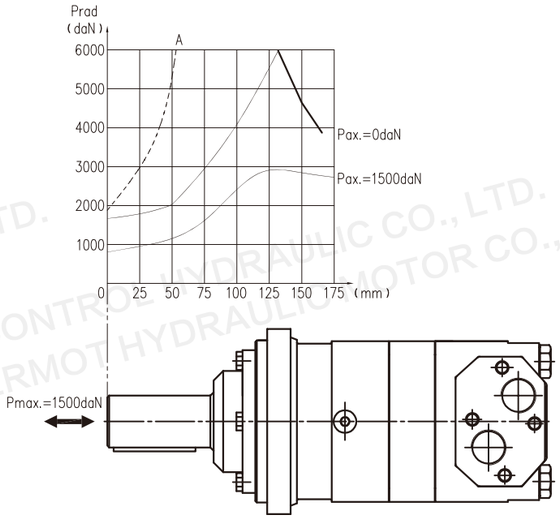

The output shaft runs with tapered bearings that allow comparatively high axial and radial forces. Curve 'A' indicates the maximum radial load on the output shaft. Any shaft load exceeding the values quoted in the curve will involve a risk a breakage. The two other curves apply to a B10 bearing life of 3000 hours at 200 RPM.

ORDER CODES

1		2		3		4		5		6
EPMZV	—		—		—		—		—	

Pos.1	2	3		4		5		6	
Structure Code	Displacement	Flange & Mounting		Output Shaft		Oil Ports & Drain Port		Rotation Direction	
EPMZV	315 400 500 630 800 1000	I 4	4-Φ18Square-flange, Φ200, MountingΦ160X11	BI	ShaftΦ40, Parallel Key12X8X63	TA501	G1Manifold4-M12, G1/4	Omit	Standard
				B2	ShaftΦ50, Parallel Key14X9X70			F	Opposite